K RAIN MANUFACTURING

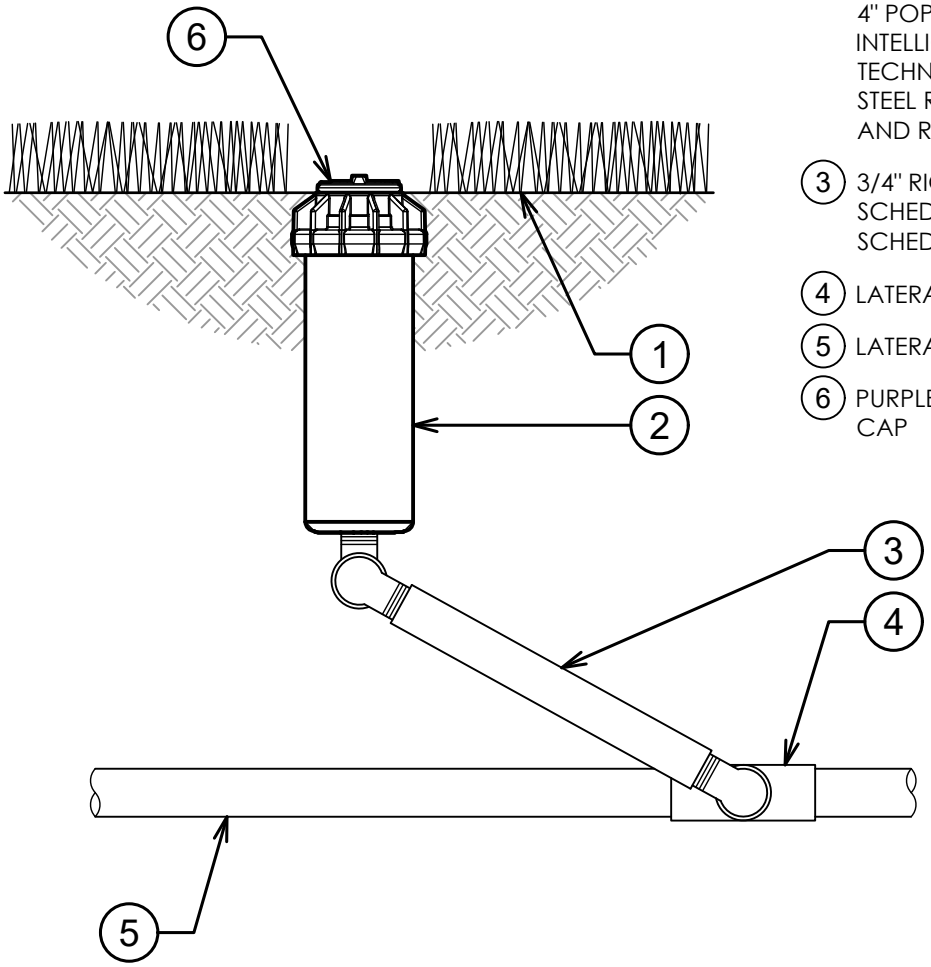

1. FINISH GRADE
2. K-RAIN RPS75i GEAR DRIVE ROTOR MODEL RPS75i-SS-RCW-CV: 4" POP-UP ROTOR WITH INTELLIGENT FLOW TECHNOLOGY™, STAINLESS STEEL RISER, CHECK VALVE, AND RECLAIMED WATER CAP
3. 3/4" RIGID SWING JOINT: SCHEDULE 80 NIPPLE, SCHEDULE 40 STREET ELLS
4. LATERAL TEE OR ELL
5. LATERAL PIPE
6. PURPLE RECLAIMED WATER CAP

00 K-RAIN RPS75i ROTOR WITH 4" POP-UP

3" = 1'-0"

www.krain.com